FITTING INSTRUCTIONS

Classic Canopy Blade Brackets
For ARB Base Rack P/N: 179XXXX REFER PAGE 2

(These are generic instructions that suit each Classic Canopy application)

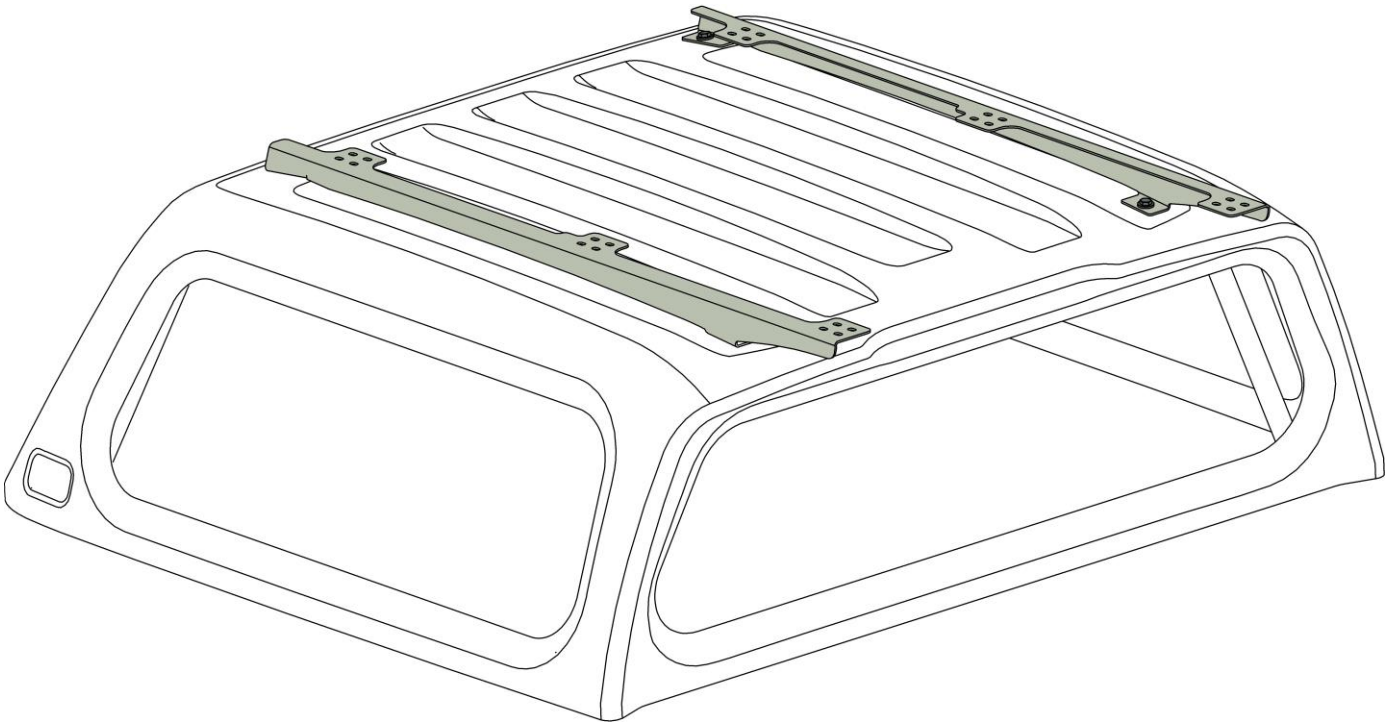

! PLEASE PROVIDE A COPY OF THESE INSTRUCTIONS TO THE CUSTOMER !

!! IMPORANT !! READ FIRST - BEFORE FITTING INTERNAL FRAMES:

- **Most canopies have dimple points moulded in the roof of canopy shells for drilling mounting holes for roof mounting systems prior to installing internal frames. However:**
  - **Please refer to internal frame fitting instructions for Ford Ranger, Mazda BT50, Holden Colorado, Isuzu D-Max and VW Amarok where the lower position of the page is dated after 1/11/19. These have dimensions where the roof of these canopies need to be drilled in the roof for internal frames to match up to the fixed length blade support brackets in this kit.**

If you have any queries regarding the installation of this product please contact the distributor from whom it was purchased, or alternatively the ARB office in your state.
Head Office – ARB Corporation Ltd VIC: 42-44 Garden Street, Kilsyth, Victoria, 3137 Tel: (03) 9761 6622 Fax: (03) 9761 6807
WA:(08) 9244 3553 **NSW:** (02) 9821 3633 **ACT:** (02) 6280 7475 **SA:** (08) 8244 5001 **QLD:** (07) 3872 3872 **NT:** (08) 8947 2262 **TAS:** (03) 6331 4190

IMPORTANT:

- These “Blade Brackets”, are designed for fitment with roof racks and internal frame brackets (sold separately). **INTERNAL FRAME BRACKETS MUST BE FITTED PRIOR TO THE STAGE “SECTION2- PRE-FITTING THE BLADE BRACKETS TO THE RACK” .** Blade brackets are vehicle specific and sold separately, refer to the application chart via you ARB dealer, or call ARB.
- It is advisable to have the canopy rack fitted by an authorised dealer.
- Fitment can be undertaken with one person, however two people are required to lift the rack into place and bolt it to the roof of the canopy.

CUSTOMER INFORMATION – SAFETY- IMPORTANT:

- It is advisable to have the canopy rack fitted by an authorised dealer.
- Always load roof racks and roof bars in accordance with their provided specifications.
- This product is only to be used on ARB Classic Canopies.
- This product is rated to a **net payload of 100kg**, when fitted with an ARB Base Rack.
- Roof payload must be evenly distributed over the loading area, with the centre of gravity kept as low as possible. Narrow and heavy load should be kept close to the mounting feet.
- Always observe local safety laws for long/overhanging loads.
- Always tie down loads with quality straps. Check and retighten loads during the journey. Elastic straps are <u>not suitable</u> for securing loads
- Large objects such as surfboards should preferably stacked, instead of laid side by side. This reduces the aerodynamic lifting force. They should be strapped both front and rear.
- For carrying special items such as bicycles, skis and kayaks, specially designed carriers are recommended to be used.
- Loaded roof rack systems will affect the vehicles cross wind sensitivity, cornering and braking characteristics. <u>Driving techniques should be altered to suit by reducing corner speed and increasing braking distance.</u>
- <u>Do not make any modifications to interior frame brackets such as drilling or bending.</u>
- ARB recommends only fitting ARB approved accessories, designed for your canopy and frame system
- <u>Do not use internal frame bracket systems as hanging points or tie down points for loads</u>
- Do not allow solvents, chemicals or oils to contact the canopy or internal frames, as damage can occur. Clean interior canopy surfaces with water and mild detergent.
- The ARB Classic Canopy Blade Brackets and ARB Classic Canopy Racks must never be fitted to another product. Only use with the specific Classic Canopy Internal Frames.

If you have any queries regarding the installation of this product please contact the distributor from whom it was purchased, or alternatively the ARB office in your state.
Head Office – ARB Corporation Ltd VIC: 42-44 Garden Street, Kilsyth, Victoria, 3137 Tel: (03) 9761 6622 Fax: (03) 9761 6807
WA:(08) 9244 3553 **NSW:** (02) 9821 3633 **ACT:** (02) 6280 7475 **SA:** (08) 8244 5001 **QLD:** (07) 3872 3872 **NT:** (08) 8947 2262 **TAS:** (03) 6331 4190

TOOL LIST FOR FITMENT:

• Torque Wrench 0-25Nm • Tape Measure • Sharp scissors • Socket set • Cleaning cloths / rags	• Silicon Caulking gun • Neutral cure Non Acetic Silicon (such as Polyurethane) • Wax and grease remover • Scriber

FITTING TO THE CANOPY IS UNDERTAKEN IN 4 STAGES:

1. **Preparing the frame brackets, seals and fitting the roof mount spacers..**
2. **Pre-fitting the Blade brackets to rack.**
3. **Fitting to the Internal frame brackets.**
4. **Clean, and check list sign off for record keeping and Owner's Manual Supplement.**

!! IMPORTANT !! other than specifically specified in this instruction

REQUIRED SCREW TORQUES: M6=9Nm M8=22Nm

Screw torques must be adhered to avoid warranty issues and should be checked at vehicle service intervals.

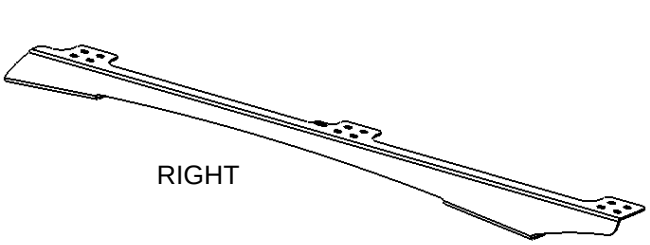

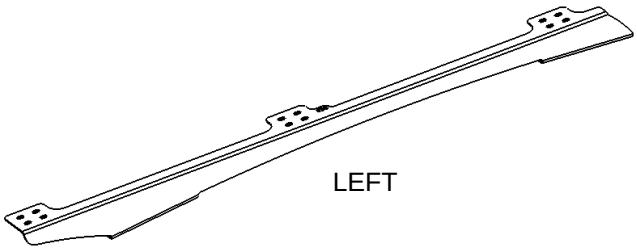

THE BOX FITTING KIT CONTAINS:

BLADE BRACKETS:

VEHICLE APPLICATION:	KIT NUMBER	BRACKET "RIGHT"	QTY	BRACKET "LEFT"	QTY
Ford Ranger PX 2011+	17940030	3752620R	1	3752620L	1
Mazda BT50 2011+	17940030	3752620R	1	3752620L	1
GM Colorado 2012+	17948030	3752621R	1	3752621L	1
Isuzu DMax 2012+	17948030	3752621R	1	3752621L	1
Nissan Navara NP300 2015 -2020 **(OLD)**	17938020	3752622R	1	3752622L	1
Toyota Hilux 2015+	17914040	3752623R	1	3752623L	1
Toyota Hilux J-DECK 2015+	17914040	3752623R	1	3752623L	1
Volkswagen Amarok 2011+	17970020	3752625R	1	3752625L	1
Mitsubishi Triton 2015+	17946020	3752624R	1	3752624L	1
Isuzu DMax 2020+	17948050	3750548R	1	3750548L	1
Nissan Navara NP300 2021+	17938030	3750900R	1	3750900L	1
Ford Ranger Dual Cab P703 2022+	17940060	3753309R	1	3753309L	1
Ford Ranger Extra Cab P703 2022+	17940065	3753590R	1	3753590L	1
Great Wall Cannon Dual Cab 2020+	17971005	3755036R	1	3755036L	1
Mitsubishi Triton Dual Cab MY24+	17646050	37500134R	1	37500134L	1

If you have any queries regarding the installation of this product please contact the distributor from whom it was purchased, or alternatively the ARB office in your state.
Head Office – ARB Corporation Ltd VIC: 42-44 Garden Street, Kilsyth, Victoria, 3137 Tel: (03) 9761 6622 Fax: (03) 9761 6807
WA:(08) 9244 3553 **NSW:** (02) 9821 3633 **ACT:** (02) 6280 7475 **SA:** (08) 8244 5001 **QLD:** (07) 3872 3872 **NT:** (08) 8947 2262 **TAS:** (03) 6331 4190

FITTING KIT 6177470	Part No	Picture	Qty	Description
	665512	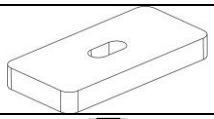	4	BLADE BRACKET SEAL
	665511	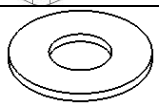	4	SEAL WASHER
	3193862	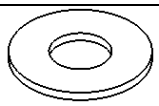	4	CLAMP WASHER
	3195184	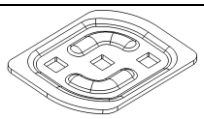	6	STUD PLATE
	6151921	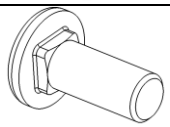	12	M8x20 COACH HEAD BOLT
	6151212	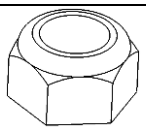	12	M8 NYLOC NUT
	4581303	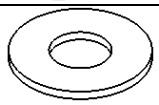	12	M8x25.4x3FLAT WASHER
	6151934	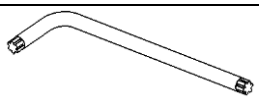	1	T40 TORX ALLEN KEY
	3783610		1	FITTING INSTRUCTIONS BLADE CLASSIC

If you have any queries regarding the installation of this product please contact the distributor from whom it was purchased, or alternatively the ARB office in your state.
Head Office – ARB Corporation Ltd VIC: 42-44 Garden Street, Kilsyth, Victoria, 3137 Tel: (03) 9761 6622 Fax: (03) 9761 6807
WA:(08) 9244 3553 **NSW:** (02) 9821 3633 **ACT:** (02) 6280 7475 **SA:** (08) 8244 5001 **QLD:** (07) 3872 3872 **NT:** (08) 8947 2262 **TAS:** (03) 6331 4190

BEFORE STARTING, READ ALL STEPS OF THE INSTRUCTIONS CAREFULLY AND CHECK ALL PARTS

SECTION 1: PREPARING THE FRAME BRACKETS & SEALS:

FRONT OF CANOPY

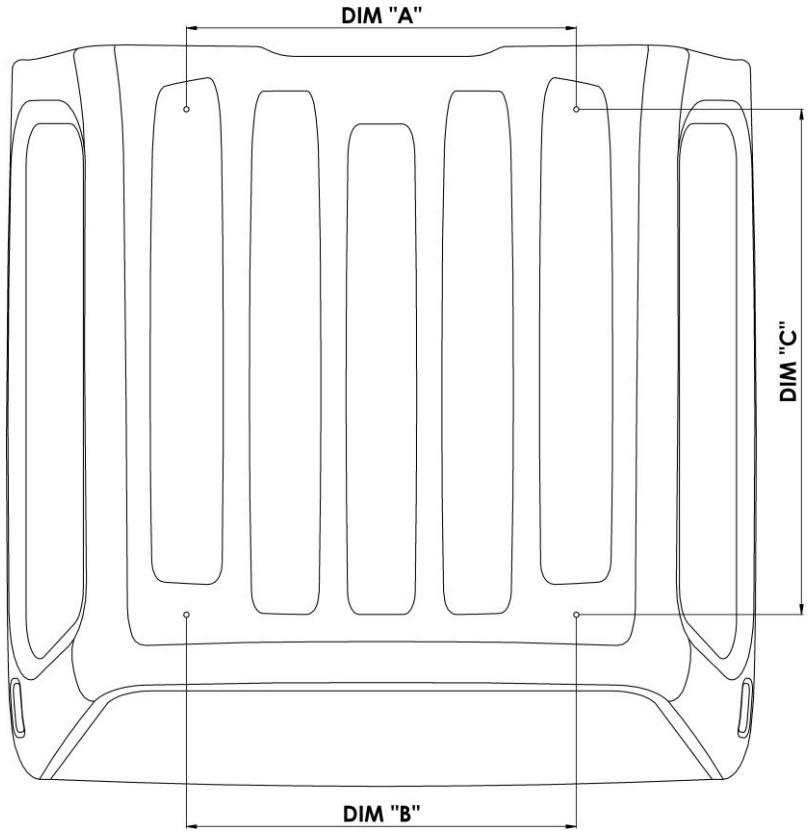

1.1) Clean the roof of the canopy.

1.2) Measure the centre distances of the spacers the were previously installed when fitting internal frames (sold separately) and record the dimensions.

DIM “A” =

DIM “B” =

DIM “C” =

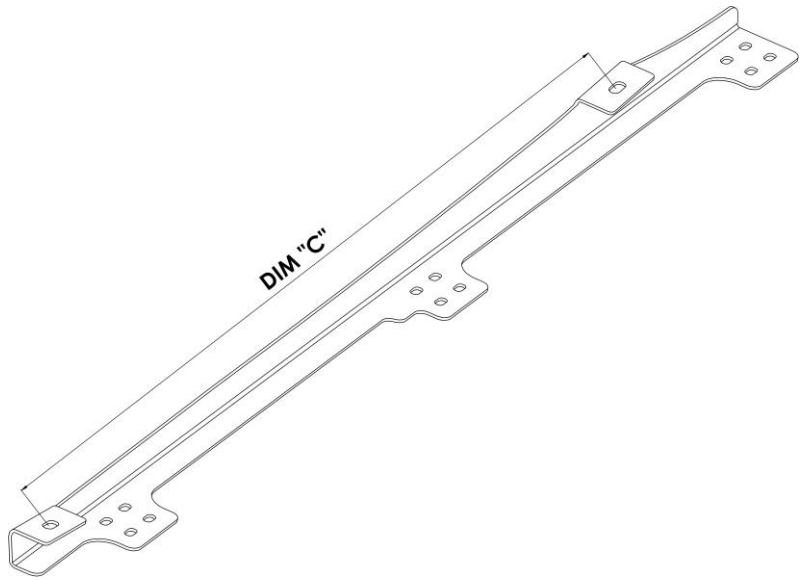

1.3) Check DIM “C” on blade brackets to ensure it is the same as DIM “C” measured on canopy

If you have any queries regarding the installation of this product please contact the distributor from whom it was purchased, or alternatively the ARB office in your state.
Head Office – ARB Corporation Ltd VIC: 42-44 Garden Street, Kilsyth, Victoria, 3137 Tel: (03) 9761 6622 Fax: (03) 9761 6807
WA:(08) 9244 3553 **NSW:** (02) 9821 3633 **ACT:** (02) 6280 7475 **SA:** (08) 8244 5001 **QLD:** (07) 3872 3872 **NT:** (08) 8947 2262 **TAS:** (03) 6331 4190

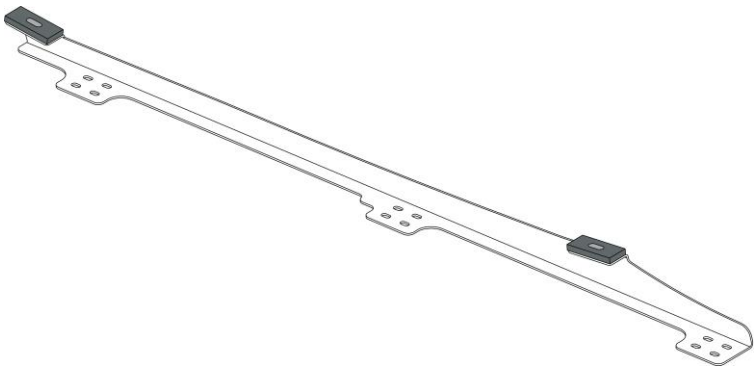	1.4) Remove the adhesive backing paper from the blade bracket seal and apply one blade bracket seal to each of the base pads on both blade brackets.
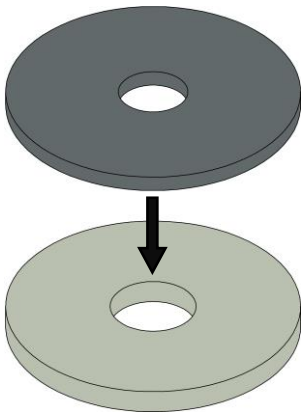	1.5) Remove the adhesive backing paper from the seal washer and apply to the clamp washer. Repeat this step for all 4 seal washers

SECTION 2: FITTING BLADES TO RACK

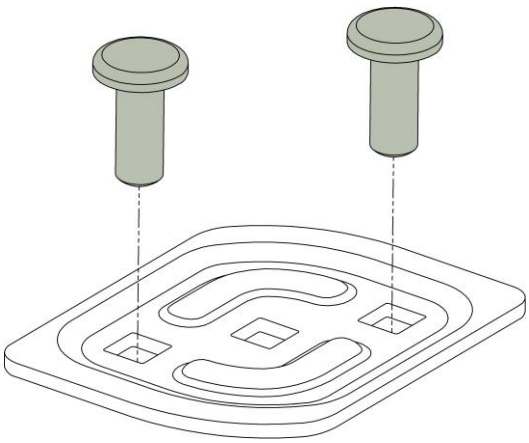	2.1) Insert 2, M8 x 20 Coach head bolts into each of the Stud Plates as shown

If you have any queries regarding the installation of this product please contact the distributor from whom it was purchased, or alternatively the ARB office in your state.
Head Office – ARB Corporation Ltd VIC: 42-44 Garden Street, Kilsyth, Victoria, 3137 Tel: (03) 9761 6622 Fax: (03) 9761 6807
WA:(08) 9244 3553 **NSW:** (02) 9821 3633 **ACT:** (02) 6280 7475 **SA:** (08) 8244 5001 **QLD:** (07) 3872 3872 **NT:** (08) 8947 2262 **TAS:** (03) 6331 4190

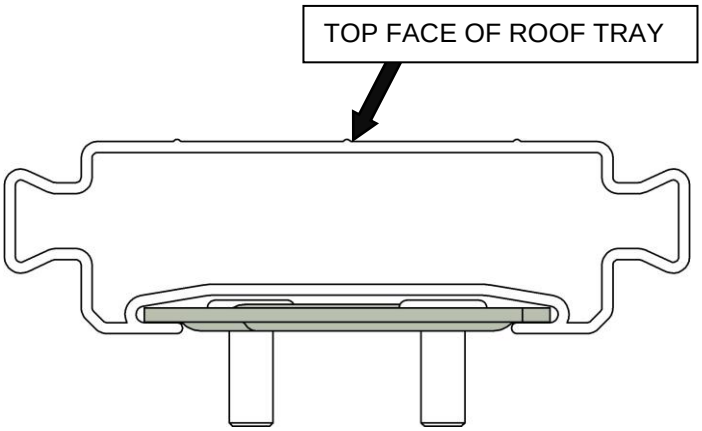

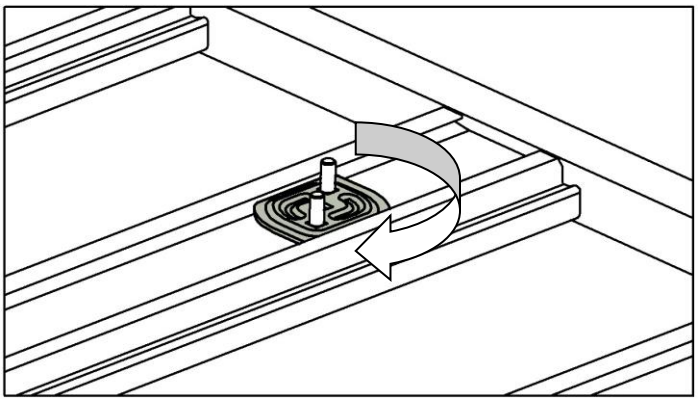

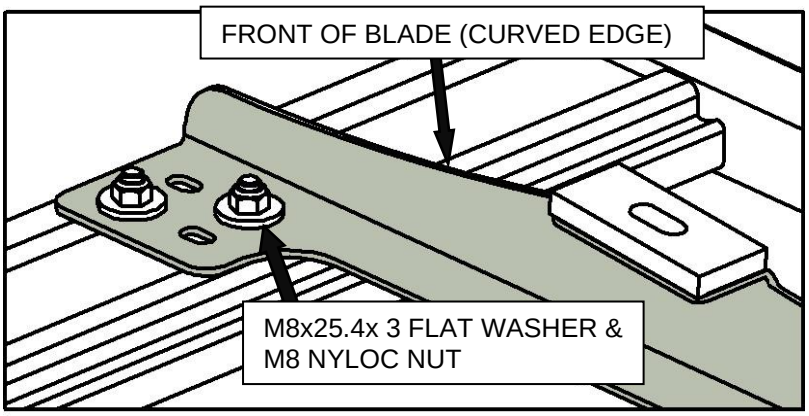

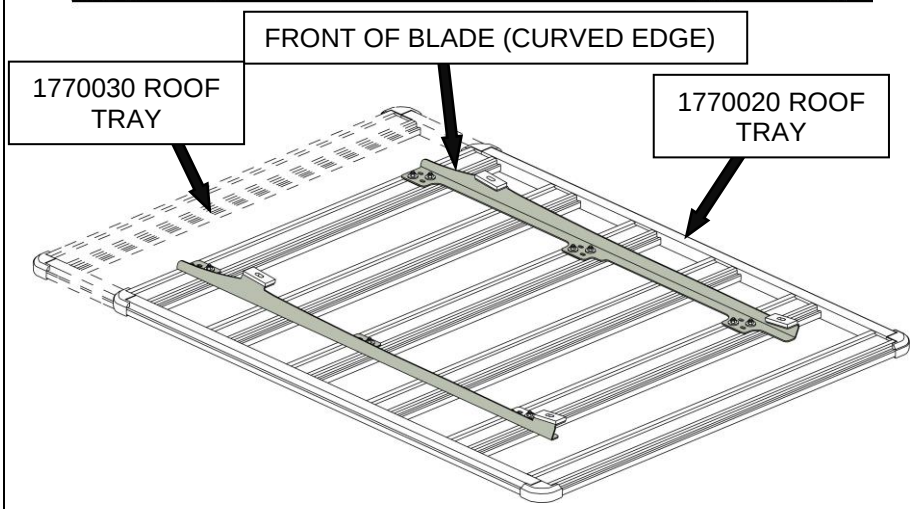

2.2) Place the Roof Tray on a clean flat surface, provide protection to the top face of roof tray to avoid marking of surfaces

2.3) Insert the previously assembled stud plates into the roof tray channels as shown

2.4) Assemble the roof blades to the roof tray using M8x 25.4x 3 flat washers and M8 nyloc nuts. Do not fully tighten M8 nyloc nuts at this stage.

If you have any queries regarding the installation of this product please contact the distributor from whom it was purchased, or alternatively the ARB office in your state.
Head Office – ARB Corporation Ltd VIC: 42-44 Garden Street, Kilsyth, Victoria, 3137 Tel: (03) 9761 6622 Fax: (03) 9761 6807
WA:(08) 9244 3553 **NSW:** (02) 9821 3633 **ACT:** (02) 6280 7475 **SA:** (08) 8244 5001 **QLD:** (07) 3872 3872 **NT:** (08) 8947 2262 **TAS:** (03) 6331 4190

FRONT OF ROOF TRAY

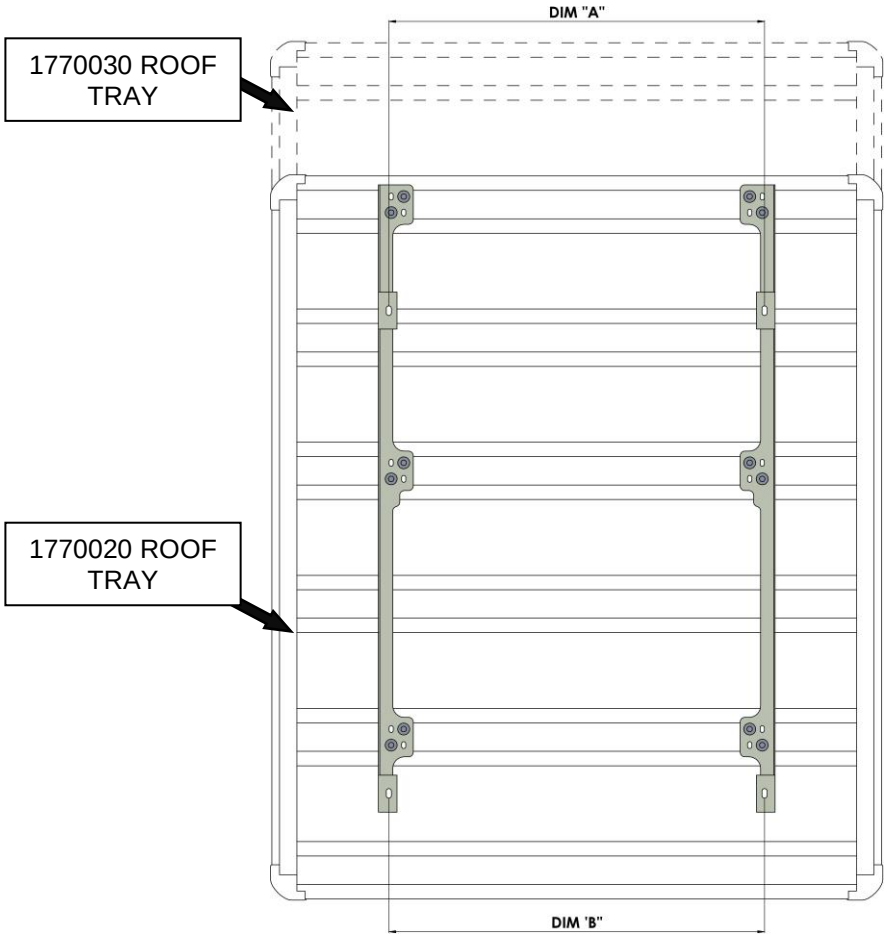

2.5) Using the measurements obtained in step 1.2 setup the blade brackets as shown. Ensure that the blade brackets are symmetric about the centre of the roof tray.

2.6) Once measurements are correct tighten all 12 M8 nyloc nuts to ensure blades cannot move freely. Do not torque fasteners at this stage.

If you have any queries regarding the installation of this product please contact the distributor from whom it was purchased, or alternatively the ARB office in your state.
Head Office – ARB Corporation Ltd VIC: 42-44 Garden Street, Kilsyth, Victoria, 3137 Tel: (03) 9761 6622 Fax: (03) 9761 6807
WA:(08) 9244 3553 **NSW:** (02) 9821 3633 **ACT:** (02) 6280 7475 **SA:** (08) 8244 5001 **QLD:** (07) 3872 3872 **NT:** (08) 8947 2262 **TAS:** (03) 6331 4190

SECTION 3: INSTALLING ROOF TRAY TO INTERNAL FRAME BRACKETS

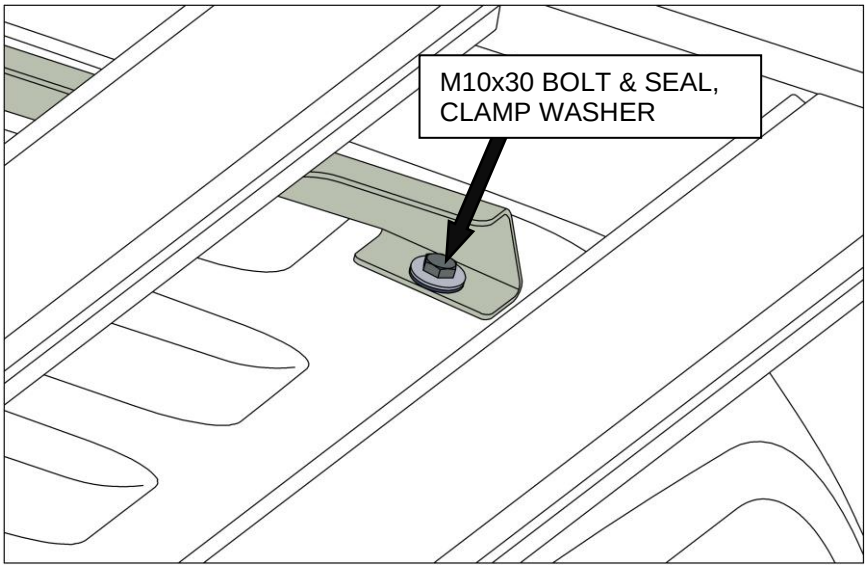

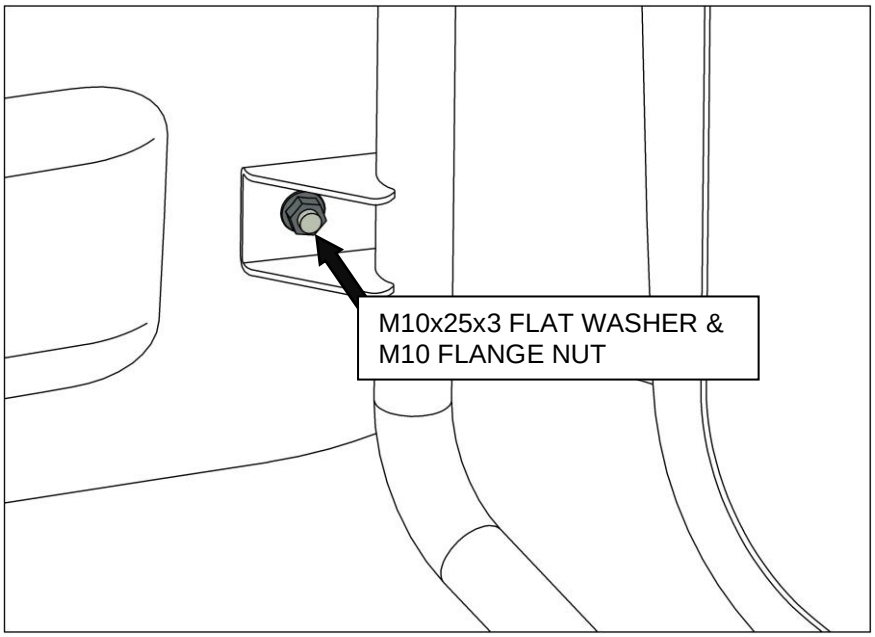

3.1) Clean the roof of canopy

3.2) With the aid of another person lift the roof tray onto the canopy roof and align the slots in the blade brackets with the holes in the roof spacers. Never slide the roof tray on the canopy roof as this will cause damage to the blade bracket seals

3.3) Working from the outside of canopy fit a M10 x 30 bolt with a seal and clamp washer through each of the internal frame bracket holes. If fasteners do not go through blade bracket feet adjust blade brackets accordingly.

3.4) Once blade brackets are in correct location torque the 12 M8 nylocs securing the blade brackets to roof tray to 22Nm. If there is insufficient clearance for torque wrench to fit LIFT rack upwards to allow for sufficient clearance to access.

3.5) With the aid of another person fit a M10 x 25 x 3 flat washer and M10 flange nut in the four locations to secure the blade brackets, canopy shell and internal frame brackets together.

3.6) Torque all 4 fasteners to 44Nm

3.7) Perform a water leak test around mount points

3.8) Place a copy of these fitting instructions in the vehicles owner's manual

If you have any queries regarding the installation of this product please contact the distributor from whom it was purchased, or alternatively the ARB office in your state.
Head Office – ARB Corporation Ltd VIC: 42-44 Garden Street, Kilsyth, Victoria, 3137 Tel: (03) 9761 6622 Fax: (03) 9761 6807
WA:(08) 9244 3553 **NSW:** (02) 9821 3633 **ACT:** (02) 6280 7475 **SA:** (08) 8244 5001 **QLD:** (07) 3872 3872 **NT:** (08) 8947 2262 **TAS:** (03) 6331 4190

Completed Roof Tray and Blade Bracket installation

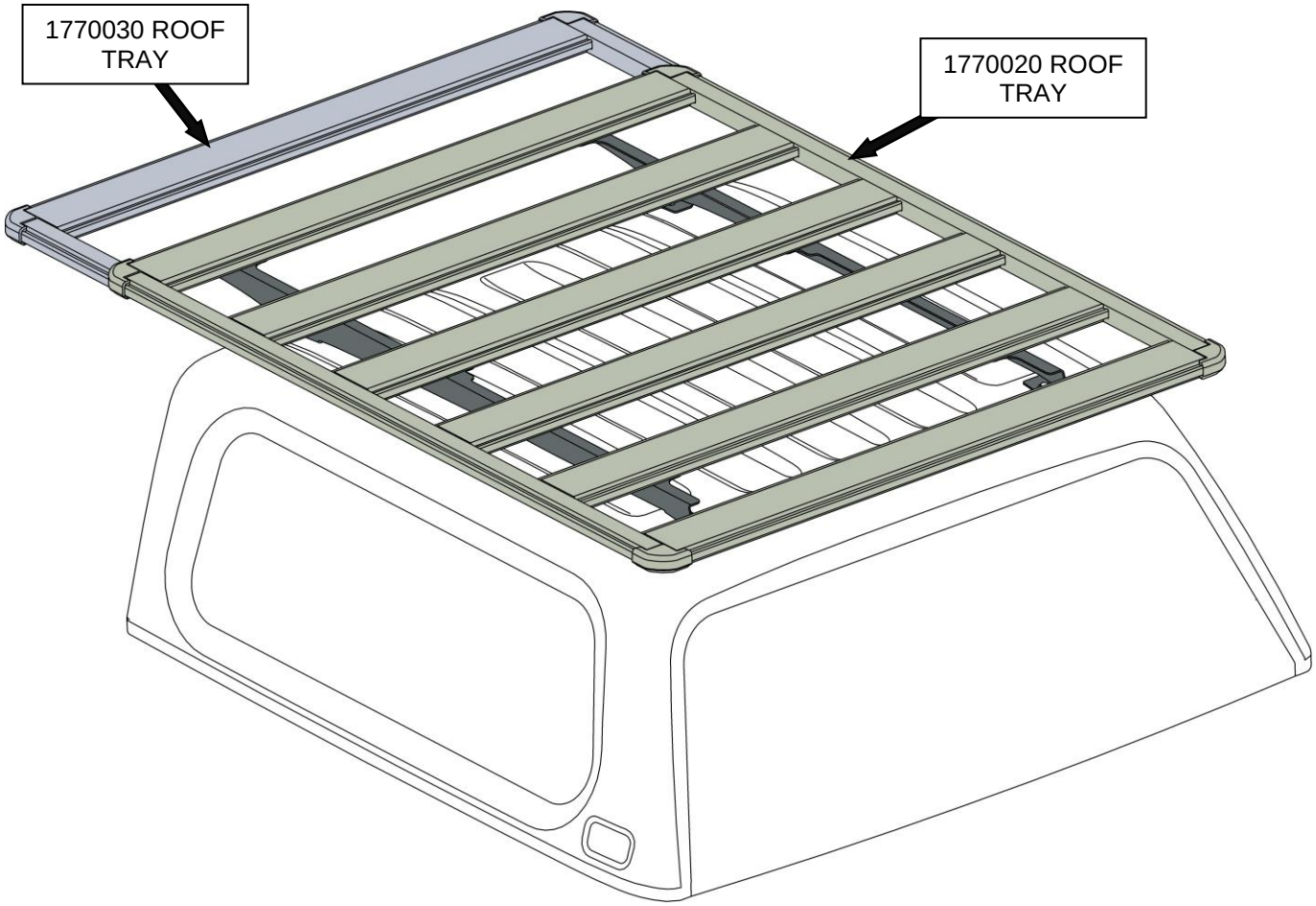

If you have any queries regarding the installation of this product please contact the distributor from whom it was purchased, or alternatively the ARB office in your state.
Head Office – ARB Corporation Ltd VIC: 42-44 Garden Street, Kilsyth, Victoria, 3137 Tel: (03) 9761 6622 Fax: (03) 9761 6807
WA:(08) 9244 3553 **NSW:** (02) 9821 3633 **ACT:** (02) 6280 7475 **SA:** (08) 8244 5001 **QLD:** (07) 3872 3872 **NT:** (08) 8947 2262 **TAS:** (03) 6331 4190